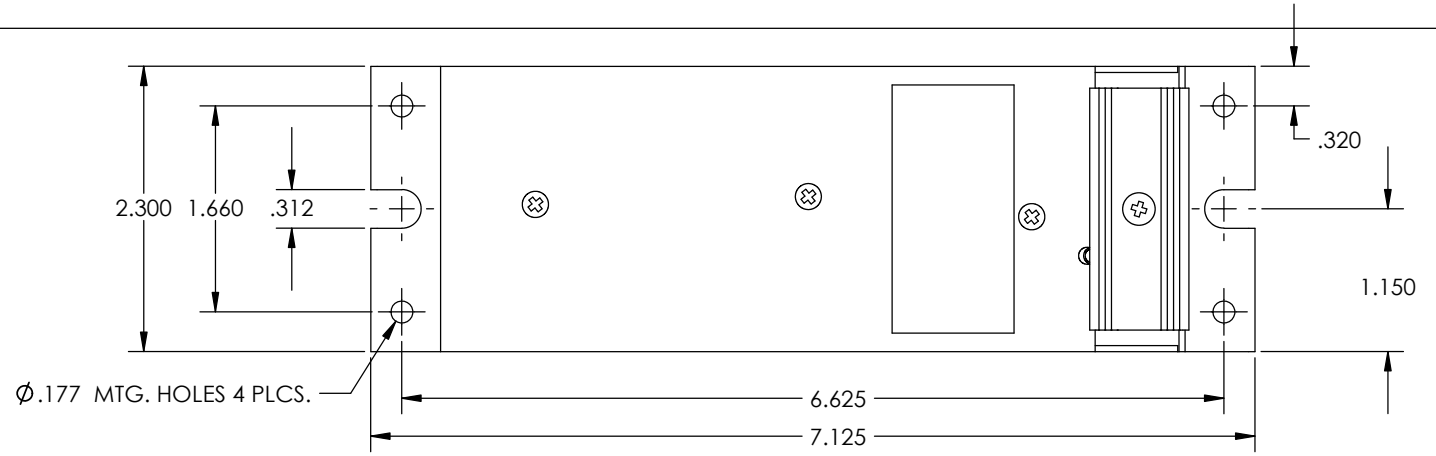

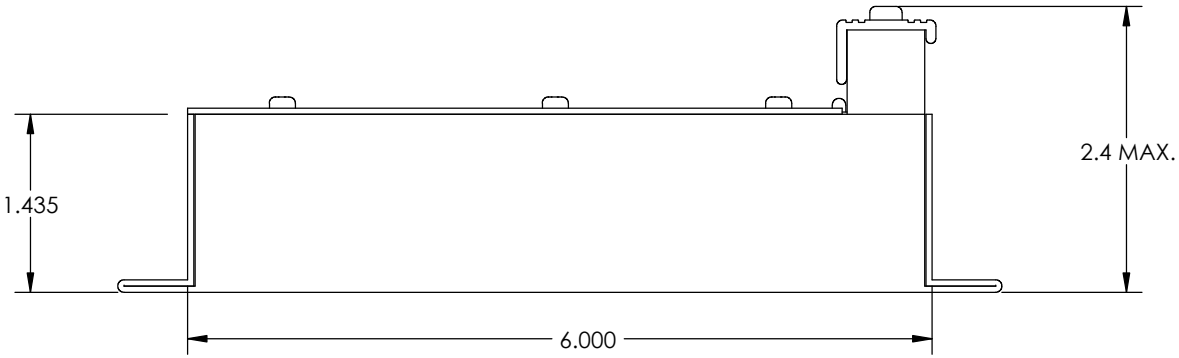

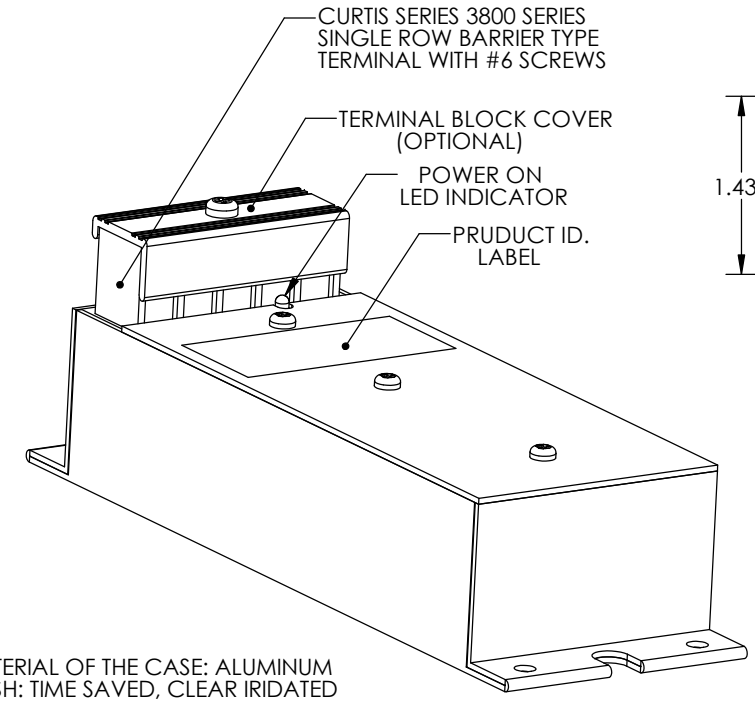

MATERIAL OF THE CASE: ALUMINUM
FINISH: TIME SAVED, CLEAR IRIDATED
THE UNIT IS POTTED WITH SILICONE COMPOSITE
POTTING COMPOUND

DIMENSIONS ARE IN INCHES
TOLERANCES ON
DECIMALS: XXX ± 0.008"
XX ± 0.012"
ANGLES: ± 2°
FRACTIONS: ± 1/64"
UNLESS OTHERWISE STATED

EDGES & HOLES DEBURRED
SURFACES FREE OF SCRATCHES

THIS DOCUMENT IS THE PROPERTY
OF ABSOPULSE ELECTRONICS LTD.
ITS CONTENTS ARE PROPRIETARY AND
MAY NEITHER BE COPIED, REPRODUCED
NOR ITS CONTENTS DISCLOSED TO OTHERS
WITHOUT PRIOR WRITTEN AGREEMENT
FROM ABSOPULSE ELECTRONICS LTD.

Title: OUTLINE DRAWING

ABSOPULSE

Part of: **RWY 30 ... 150 SERIES**

Date: MARCH 09.05